Articulated Dumper

D 100 AHA
D 100 AHG

TECHNICAL DATA

GENERAL		D 100 AHA	D 100 AHA COMPACT	D 100 AHG
Unloading system		High	High	Rotating
Load capacity	Kg	1000	1000	1000
Chassis		Articulated and oscillating	Articulated and oscillating	Articulated and oscillating
Water hopper capacity	l	345	345	325
Level hopper capacity	l	395	395	390
Heaped hopper capacity	l	565	565	545
Empty weight	Kg	1300	1300	1300
Transmission		Hydrostatic	Hydrostatic	Hydrostatic
ENGINE				
Brand		KUBOTA	KUBOTA	KUBOTA
Model		D1105-E4B	D1105-E4B	D1105-E4B
Power	kW	15,6	15,6	15,6
Operating speed	rpm	2400	2400	2400
Torque	Nm@rpm	71,4@1600	71,4@1600	71,4@1600
No. of cylinders		3	3	3
Emissions		Stage V - EPA Tier4	Stage V - EPA Tier4	Stage V - EPA Tier4
Noise	dB(A)	101	101	101
DRIVING				
Max. speed	Km/h	15	15	15
Maximum gradient	%	38	38	38
External turning radius	mm	3060	3060	3035
Traction		4x4	4x4	4x4
Tyres		27x8.5-15"	6.5/80-12	27x8.5-15"
HYDRAULIC SYSTEM				
Hydraulic circuit		8 cc gear pump	8 cc gear pump	8 cc gear pump
Working pressure	bar	180	180	180
TANK CAPACITY				
Fuel	l	23	23	23
Hydraulic system	l	21.2	21.2	21.2
BRAKES				
Service		Sealed brakes. Mechanical drive	Sealed brakes. Mechanical drive	Sealed brakes. Mechanical drive
Parking		Sealed brakes. Mechanical drive	Sealed brakes. Mechanical drive	Sealed brakes. Mechanical drive

DIMENSIONS

D 100 AHA

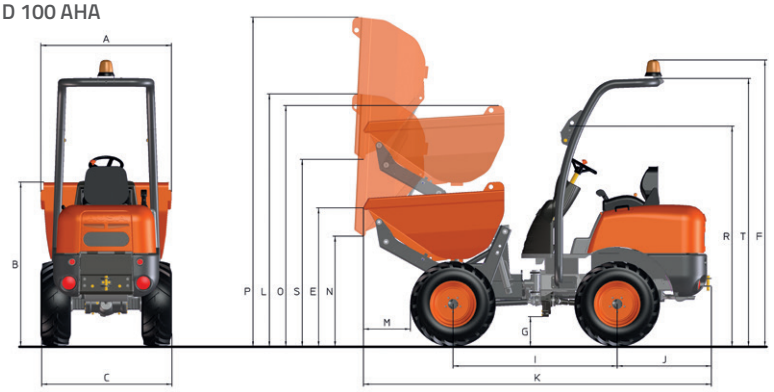

D 100 AHG

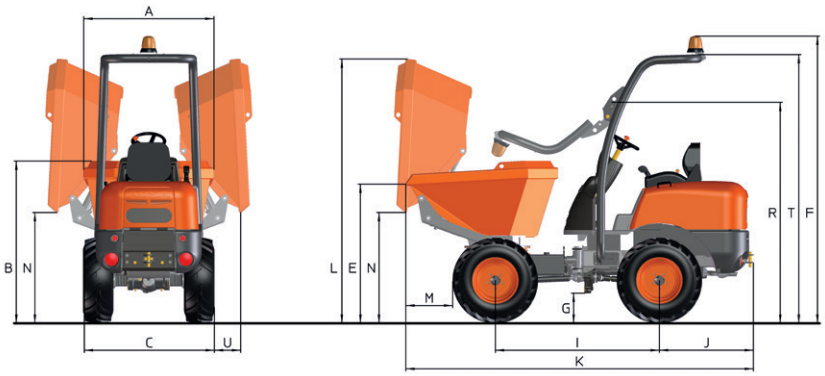

DIMENSIONS (mm)	D 100 AHA	D 100 AHA COMPACT	D 100 AHG
A	990	990	990
B	1440	1440	1420
C	1100	990	1100
E	1200	1200	1200
F	2560	2560	2560
G	220	220	220
I	1500	1500	1500
J	860	860	860
K	3190	3190	3190
L	2250	2250	2350
M	485	485	485
N	955	955	955
O	2145	2145	-
P	2950	2950	-
R	1955	1955	1955
S	1655	1655	-
T	2390	2390	2390
U	-	-	300

www.ausa.com

Products are subject to modifications without prior notice. Images throughout the spec sheet may refer to non-standard machines or non-available configurations depending on models.

AUSA's logo and corporate identity are property of the Company, they cannot be used without authorization.